PROPOSED SITE PLAN

FOR

BRANOVER - THREE SINGLE FAMILY HOMES

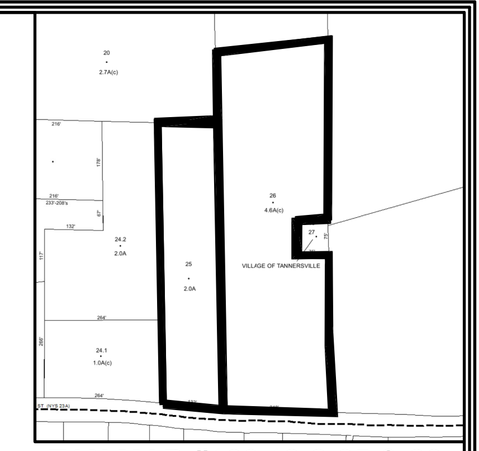

TAX MAP #166.18-2-25 & 26

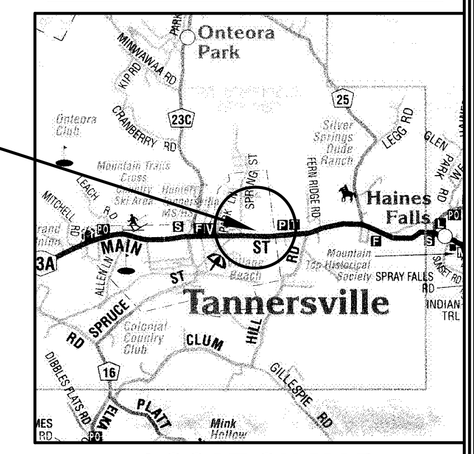

LOCATION MAP

VILLAGE OF TANNERSVILLE BOARD ENDORSEMENT FOR SITE PLAN

APPROVAL SUBJECT TO REVIEW BY THE FOLLOWING AGENCIES:		ROAD STATUS: INGRESS EGRESS RIGHT OF WAY	
VILLAGE OF TANNERSVILLE	☐	A) UNIMPROVED	☐
DEPARTMENT OF HEALTH	☐	B) IMPROVED	☐
DEPARTMENT OF ENIRONMENTAL CONSERVATION	☐	VILLAGE ROAD	☐
DEPARTMENTOF ENVIRONMENTAL PROTECTION	☐	TOWN ROAD	☐
GREENE COUNTY PLANNING BOARD	☐	COUNTY ROAD	☐
OTHER	☐	STATE ROAD	☐

OTHER CONDITIONS OF APPROVAL:

,CHAIRMAN

OWNERS CERTIFICATION

The undersigned, owner or owner's authorized representative of the property shown on this plat, does hereby certify that he/she has reviewed this plat, is familiar with this map, its contents and its notes and hereby consets to all said terms and conditions as stated hereon and agree to file this map with the Greene County Clerk.

Signature Date

VILLAGE BOARD ENDORSEMENT

Approved by resolution of the planning board of the Village of Tannersville, subject to all conditions and requirements of said resolution. Any change, erasure, modification, or revision of this plat as approved shall void this approval.

Mayor – Village Board Date

UNAUTHORIZED ALTERATION OR ADDITION TO THIS DRAWING IS A VIOLATION OF SECTION 7209, SUBDIVISION 2, OF THE NEW YORK STATE EDUCATION LAW. COPIES OF THIS DRAWING ARE VALID ONLY IF THEY BEAR THE SEAL OF THE PREPARER. IT IS A VIOLATION OF NEW YORK STATE EDUCATION LAW FOR ANY PERSON, TO ALTER THIS CLASS, SPECIFICATIONS OR REPORTS IN ANY WAY, UNLESS ACTING UNDR THE DIRECTION OF A LICENSED PROFESSIONAL (ARCHITECT, ENGINEER, LANDSCAPE ARCHITECT, SURVEYOR) AND THE ALTERATION IS SPECIFICALLY INDICATED AND DESCRIBED BY SUCH LICENSED PROFESSIONAL. ANY SUCH ALTERATION BY ANY PERSON OTHER THAN THE LICENSED PROFESSIONAL PREPARER OF THIS DRAWING IS IN VIOLATION OF SECTION 7209 OF THE NEW YORK STATE EDUCATION LAW.

© COPYRIGHT 2026 KAATERSKILL ASSOCIATES, LANDSCAPE ARCHITECTS, SURVEYORS

KAATERSKILL ASSOCIATES
SURVEYORS-ARCHITECTS-ENGINEERS-LANDSCAPE ARCHITECTS-CONSTRUCTION MANAGERS
CAIRO, NY (518) 622-9667 WWW.KEAENG.COM

REV	DATE	DESCRIPTION	APP.
2	9/17/26	REV. PER DEP	DCE
1	9/9/26	SITE PLAN UPDATES	DCE

REVISIONS

PROPOSED SITE PLAN
FOR
BRANOVER - THREE SINGLE FAMILY HOMES
5860 & 5844 MAIN STREET (NYS ROUTE 23A)
VILLAGE OF TANNERSVILLE GREENE COUNTY, NY

PROJECT:	322922
DATE:	07/30/2026
SCALE:	1"=30'
DRAWN BY:	RAP
DESIGNED BY:	DCE
CHECKED BY:	DCE
FILE: 322922 X-PR SITE.DWG	

DRAWING:
SP-1
SHEET 1 OF 3

Plotted: 9/17/2026 9:54 AM By: RAP
J:\322922\Work\Proposed 322922\322922 SP-1.dwg
Layout: 1 - 2026 '06 Arch E Landscape
Xref Files: 322922 BASE
IMAGE Files: 322922 TM 166.18.tif
GREEN COUNTY.tif
IMG_8136.JPG
IMG_8136.JPG
IMG_8136.JPG
IMG_8136.JPG
V:\Tannersville Sewer Plans\
322922 TM 166.18.tif
GREEN COUNTY.tif

LANDS NOW OR FORMERLY OF
LEIGH J.V. MCGUNNIGLE
INST# D2019-2651
TM# 166.18-2-24.1

LANDS NOW OR FORMERLY OF
LEE MCGUNNIGLE &
DORIA MCGUNNIGLE
L. 709 P. 334
TM# 166.18-2-24.2

MAGNETIC

IRON PIPE FOUND (10.9' ± WEST OF PROPERTY LINE)

66' TURNPIKE BOUNDARY

APPROXIMATE LOCATION OF EXISTING MUNICIPAL WATER LINE

EXISTING VEGETATION TO REMAIN

EXISTING ENTRANCE TO REMAIN

PROPOSED ENCLOSED DUMPSTER

PROPOSED SINGLE FAMILY HOUSE 1
A
50'
32'

PROPOSED CLEANOUT

SEWER MANHOLE

CONNECT TO EXISTING SEWER

PROPOSED CLEANOUT

EXISTING DWELLING TO BE REMOVED

DECK

4' A/C UNIT

EXISTING METER BOX

EXISTING OIL FILL PIPES

PROPOSED SINGLE FAMILY HOUSE 2
B
DECK

PROPOSED DRIVEWAY WITH 2 PARKING SPACES PER HOUSE

PROPOSED CLEANOUT

PROPOSED 4" SDR-25 SEWER SDR SERVICE

PROPOSED SINGLE FAMILY HOUSE 3
C

PROPOSED DRIVEWAY MODIFICATION PER FIRE LANE REQUIREMENTS

MAINTAIN 10' MIN SEPARATION BETWEEN SEWER & WATER

PROPOSED 3/4" WATER SERVICES 3 SEPARATE LINES

CONNECT TO EXISTING WATER LINE

PROPOSED WATER EASEMENT MOTEL

SHED

EXISTING MUNICIPAL SEWER LINE

EXISTING ACCESS EASEMENT TO VILLAGE OF TANNERSVILLE

EXISTING DRIVEWAY TO BE WIDENED TO PROVIDE FIRETRUCK TURNAROUND

PROPOSED FIRE TRUCK TURN AROUND

70'
20'
20'
70'
R28'

15' SIDE SETBACK (TYP)

15' SIDE SETBACK (TYP)

LANDS NOW OR FORMERLY OF
DANIEL BRANOVER &
NADMI DRISIN
L. 932 P. 92
TM# 166.18-2-25

AREA =
1.98± ACRES

LANDS NOW OR FORMERLY OF
MAYAN 60, LLC
INST# D2021-1995
TM# 166.18-2-20

LANDS NOW OR FORMERLY OF
MAYAN 72, LLC
INST# D2021-1996
TM# 166.18-2-19

LANDS NOW OR FORMERLY OF
SUNVIEW, LLC
L. 1226 P. 244
TM# 166.18-2-26

AREA =
4.56± ACRES

NYS ROUTE 23A
(MAIN STREET)

150' FRONT RESIDENTIAL SETBACK

CONCRETE SIDEWALK

DWELLING

SEWER MANHOLE

PAVED WALK

FIRE PIT

DECK

DWELLING

GAZEBO

ELECTRIC METER

CONCRETE PAD

WATER TOWER

CONCRETE PAD

EXISTING PUBLIC WATER SUPPLY WELL

IRON PIPE FOUND (AT CORNER)

IRON PIPE FOUND (AT CORNER)

LANDS NOW OR FORMERLY OF
TOWN OF HUNTER
INST# D2019-109
TM# 166.18-2-29

LANDS NOW OR FORMERLY OF
THE VILLAGE OF TANNERSVILLE
L. 490 P. 79
TM# 166.18-2-27

LANDS NOW OR FORMERLY OF
SUDHA P. PATEL
L. 1413 P. 329
TM# 166.18-2-28

NOTES:
1) SITE PLAN BASED UPON FILED EVIDENCE OBTAINED IN JANUARY 2023.
2) PROPERTY LINES BASED ON MAP ENTITLED "BOUNDARY & TOPOGRAPHIC SURVEY FOR LEVI BLECHER" AS PREPARED BY KAATERSKILL ASSOCIATES, DATED MARCH 24, 2023.
3) THE PROJECT WILL BE DESIGNED TO ENSURE IT MEETS ALL THE SEPARATION REQUIREMENT TO THE MUNICIPAL PUBLIC WATER SUPPLY WELL ON TAX PARCEL 166.18-2-27.
4) PROPOSED WATER CONNECTIONS TO BE IN ACCORDANCE WITH THE REQUIREMENTS OF THE VILLAGE OF TANNERSVILLE.
5) HOUSES WILL BE 2.5 STORIES.
6) NO NEW SITE LIGHTING IS PROPOSED. HOUSES WILL HAVE BUILDING MOUNTED LIGHTING AT DOORWAYS.
7) ELECTRIC WILL BE PROVIDED TO ALL THREE HOUSES IN ACCORDANCE WITH THE REQUIREMENTS OF THE LOCAL UTILITY PROVIDER.

TOPOGRAPHIC NOTES:
1) MAPPING DATUM IS ASSUMED.
2) CONTOUR INTERVAL SHOWN IS 1 FOOT.
3) THIS IS NOT A BOUNDARY SURVEY.

LANDSCAPING LEGEND

	BOTANICAL NAME	COMMON NAME	QUANTITY	SIZE INSTALLED	MATURE SIZE
*	THUJA OCCIDENTALIS "SMARAGD"	DARK AMERICAN ARBORVITAE	3	4-6' HT. (0.5" CAL.)	20-30'

GRAPHIC SCALE
30 0 15 30 60 120
(IN FEET)
1 inch = 30 ft.

LEGEND

	DENOTES IRON ROD SET	WV	" " WATER VALVE
	" " PROPERTY ANGLE		" " HYDRANT
	" " IRON PIPE OR IRON ROD FOUND	S	" " SEWER MANHOLE
	" " CONCRETE MONUMENT		" " SINGLE POST SIGN
OHW	" " UTILITY POLE AND OVERHEAD UTILITY		" " LIGHT POST
	" " CHAIN LINK FENCE	W	" " WELL
	" " STONE WALL		" " WHITE CEDAR TREE

UNAUTHORIZED ALTERATION OR ADDITION TO THIS DRAWING IS A VIOLATION OF SECTION 7209, SUBDIVISION 2 OF THE NEW YORK STATE EDUCATION LAW. COPIES OF THIS DRAWING ARE VALID ONLY IF THEY BEAR THE SEAL OF THE PROFESSIONAL ARCHITECT, ENGINEER, LANDSCAPE ARCHITECT, SURVEYOR) WHO PREPARED IT. IT IS A VIOLATION OF NEW YORK STATE EDUCATION LAW FOR ANY PERSON, UNLESS ACTING UNDER THE DIRECTION OF A LICENSED PROFESSIONAL ARCHITECT, ENGINEER, LANDSCAPE ARCHITECT, SURVEYOR, TO ALTER THESE PLANS, SPECIFICATIONS, OR REPORTS IN ANY WAY. WHEN SUCH PERSONS ACT UNDER THEIR DIRECTION, ANY ALTERATION SHALL BE IDENTIFIED IN THE RECORD OF ALTERATIONS BLOCK AND THE ALTERING PROFESSIONAL SHALL SIGN, SEAL AND DATE THE ALTERATION. IF IT IS A VIOLATION OF NEW YORK STATE EDUCATION LAW FOR ANY PERSON TO ALTER THESE PLANS, SPECIFICATIONS OR REPORTS IN any WAY, UNLESS ACTING UNDER THE DIRECTION OF A LICENSED PROFESSIONAL ARCHITECT, ENGINEER, LANDSCAPE ARCHITECT, SURVEYOR, IT IS A VIOLATION OF NEW YORK STATE EDUCATION LAW FOR ANY PERSON TO ALTER THESE PLANS, SPECIFICATIONS OR REPORTS IN ANY WAY. WHEN SUCH PERSONS ACT UNDER THEIR DIRECTION, ANY ALTERATION SHALL BE IDENTIFIED IN THE RECORD OF ALTERATIONS BLOCK AND THE ALTERING PROFESSIONAL SHALL SIGN, SEAL AND DATE THE ALTERATION. IF IT IS A VIOLATION OF NEW YORK STATE EDUCATION LAW FOR ANY PERSON TO ALTER THESE PLANS, SPECIFICATIONS OR REPORTS IN ANY WAY, UNLESS ACTING UNDER THE DIRECTION OF A LICENSED PROFESSIONAL ARCHITECT, ENGINEER, LANDSCAPE ARCHITECT, SURVEYOR, IT IS A VIOLATION OF NEW YORK STATE EDUCATION LAW FOR ANY PERSON TO ALTER THESE PLANS, SPECIFICATIONS OR REPORTS IN ANY WAY. WHEN SUCH PERSONS ACT UNDER THEIR DIRECTION, ANY ALTERATION SHALL BE IDENTIFIED IN THE RECORD OF ALTERATIONS BLOCK AND THE ALTERING PROFESSIONAL SHALL SIGN, SEAL AND DATE THE ALTERATION. IF IT IS A VIOLATION OF NEW YORK STATE EDUCATION LAW FOR ANY PERSON TO ALTER THESE PLANS, SPECIFICATIONS OR REPORTS IN ANY WAY, UNLESS ACTING UNDER THE DIRECTION OF A LICENSED PROFESSIONAL ARCHITECT, ENGINEER, LANDSCAPE ARCHITECT, SURVEYOR, IT IS A VIOLATION OF NEW YORK STATE EDUCATION LAW FOR ANY PERSON TO ALTER THESE PLANS, SPECIFICATIONS OR REPORTS IN ANY WAY. WHEN SUCH PERSONS ACT UNDER THEIR DIRECTION, ANY ALTERATION SHALL BE IDENTIFIED IN THE RECORD OF ALTERATIONS BLOCK AND THE ALTERING PROFESSIONAL SHALL SIGN, SEAL AND DATE THE ALTERATION. IF IT IS A VIOLATION OF NEW YORK STATE EDUCATION LAW FOR ANY PERSON TO ALTER THESE PLANS, SPECIFICATIONS OR REPORTS IN ANY WAY, UNLESS ACTING UNDER THE DIRECTION OF A LICENSED PROFESSIONAL ARCHITECT, ENGINEER, LANDSCAPE ARCHITECT, SURVEYOR, IT IS A VIOLATION OF NEW YORK STATE EDUCATION LAW FOR ANY PERSON TO ALTER THESE PLANS, SPECIFICATIONS OR REPORTS IN ANY WAY. WHEN SUCH PERSONS ACT UNDER THEIR DIRECTION, ANY ALTERATION SHALL BE IDENTIFIED IN THE RECORD OF ALTERATIONS BLOCK AND THE ALTERING PROFESSIONAL SHALL SIGN, SEAL AND DATE THE ALTERATION. © COPYRIGHT 2021 KAATERSKILL ASSOCIATES

IMAGE Files: 322922 TM 166.18.tif
GREEN COUNTY.tif
MC-8135.jpg
MC-8136.jpg
MC-8137.jpg
MC-8138.jpg
MC-8139.jpg
Tannersville Sewer Plans.tif
2021 Tax Parcels GREEN COUNTY.tif

Last Plotted: 2026 10, 09:8 Saved: Mon 2 Jun Mon

XREF Files: 322922 BASE

Plotted: 9/9/2026 8:47:27 AM By: Robert Pratt
File: J:\2022\322922\Work\SP-2 322922 X-PR SITE.dwg

KAATERSKILL ASSOCIATES

SURVEYORS-ARCHITECTS-ENGINEERS-LANDSCAPE ARCHITECTS-CONSTRUCTION MANAGERS

CAIRO, NY (518) 622-9667 WWW.KEAENG.COM

REV	DATE	DESCRIPTION	APP.
2	9/17/26	REV. PER DEP	DCE
1	9/9/26	SITE PLAN UPDATES	DCE

REVISIONS

PROPOSED SITE PLAN
FOR
BRANOVER - THREE SINGLE FAMILY HOMES
5860 & 5844 MAIN STREET (NYS ROUTE 23A)
VILLAGE OF TANNERSVILLE GREENE COUNTY, NY

PROJECT:	322922
DATE:	07/30/2026
SCALE:	1"=30'
DRAWN BY:	RAP
DESIGNED BY:	DCE
CHECKED BY:	DCE
FILE:	322922 X-PR SITE.DWG

DRAWING:
SP-2
SHEET 2 OF 3

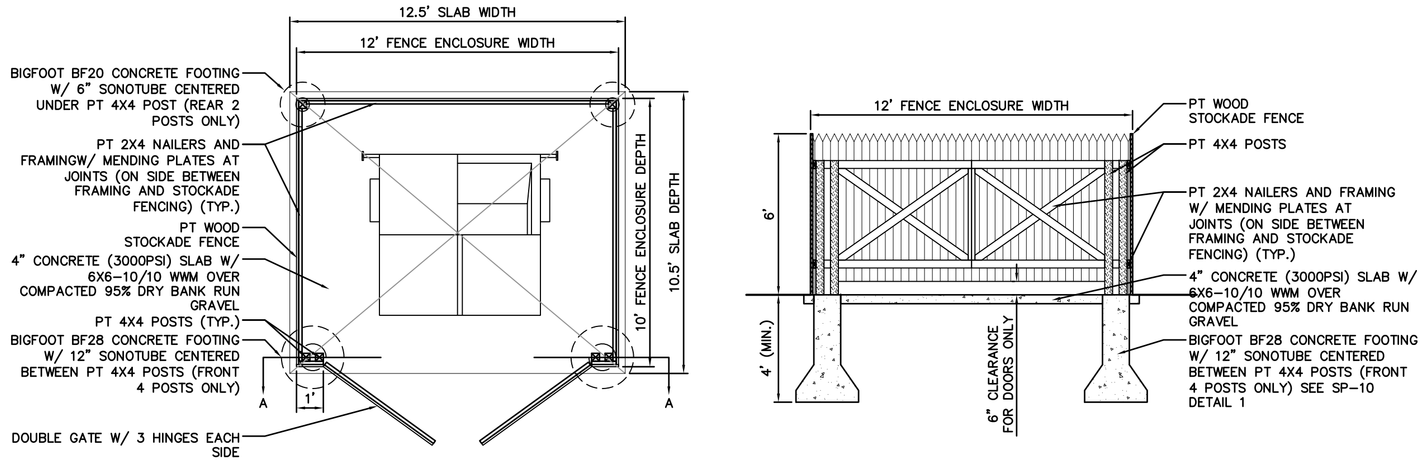

NOTE: VERIFY DUMPSTER SIZE BEFORE CONSTRUCING ENCLOSURE. ADJUST ENCLOSURE SIZE AS REQ'D TO FIT DUMPSTER.

1 DUMPSTER ENCLOSURE

SCALE: N.T.S.

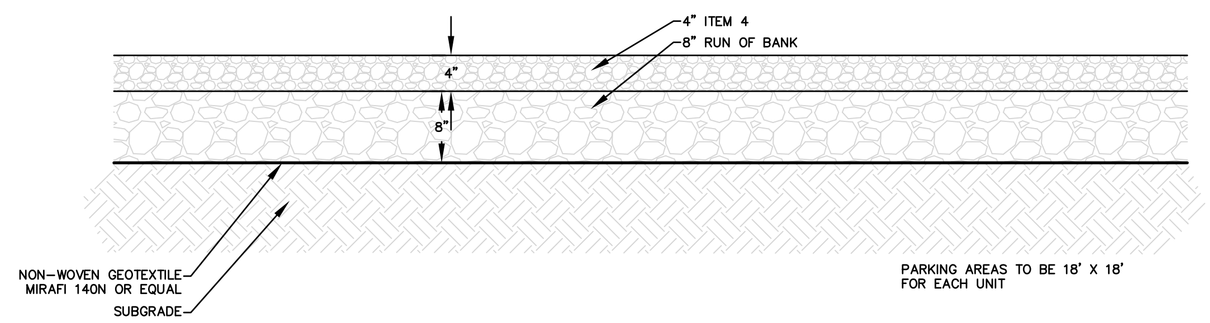

2 GRAVEL DRIVEWAY

SCALE: N.T.S.

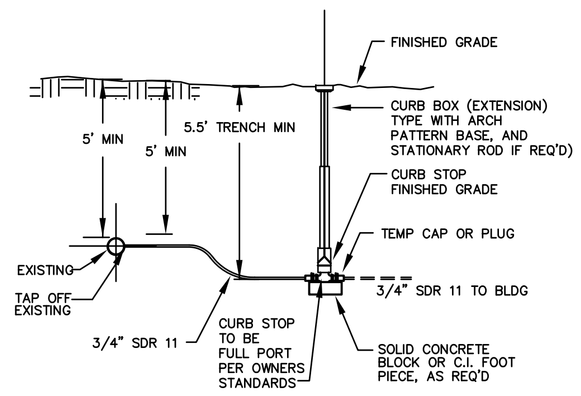

3 WATER SERVICE CONNECTION (TYP.)

N.T.S.

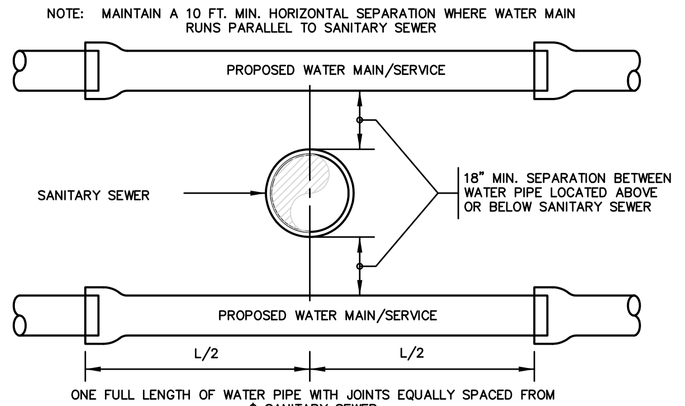

NOTES:
SEWERS CROSSING WATER MAINS SHALL BE LAID TO PROVIDE A MINIMUM VERTICAL DISTANCE OF 18" (460 mm) BETWEEN THE OUTSIDE OF THE WATER MAIN AND THE OUTSIDE OF THE SEWER. THIS SHALL BE THE CASE WHERE THE WATER MAIN IS EITHER ABOVE OR BELOW THE SEWER. THE CROSSING SHALL BE ARRANGED SO THAT THE SEWER JOINTS WILL BE EQUIDISTANT AND AS FAR AS POSSIBLE FROM THE WATER MAIN JOINTS. WHERE A WATER MAIN CROSSES UNDER A SEWER, ADEQUATE STRUCTURAL SUPPORT SHALL BE PROVIDED FOR THE SEWER TO MAINTAIN LINE AND GRADE.

4 WATER / SANITARY SEWER CROSSING (TYP.)

SCALE: N.T.S.

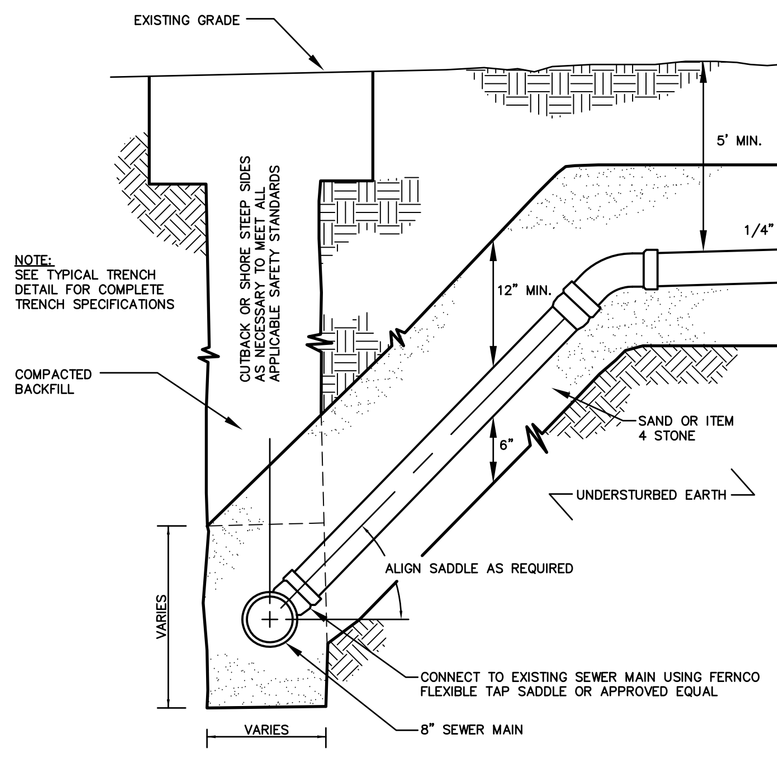

5 SEWER LATERAL CONNECTION

N.T.S.

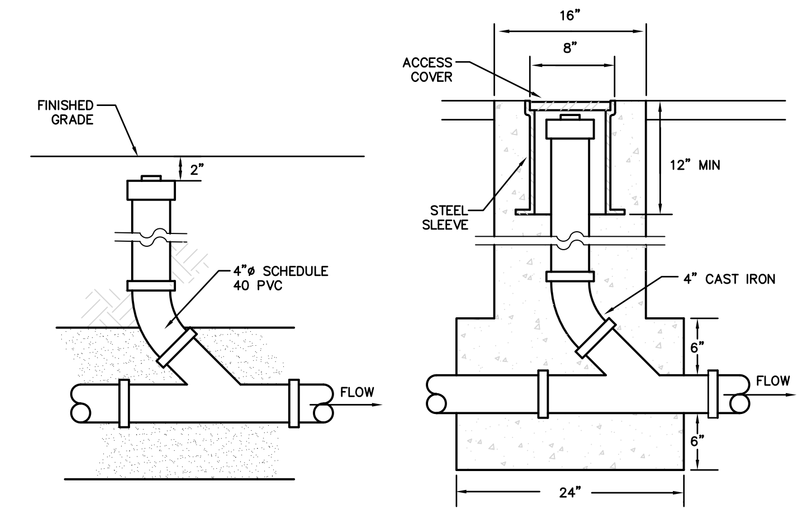

6 CLEANOUT DETAIL

SCALE: N.T.S.

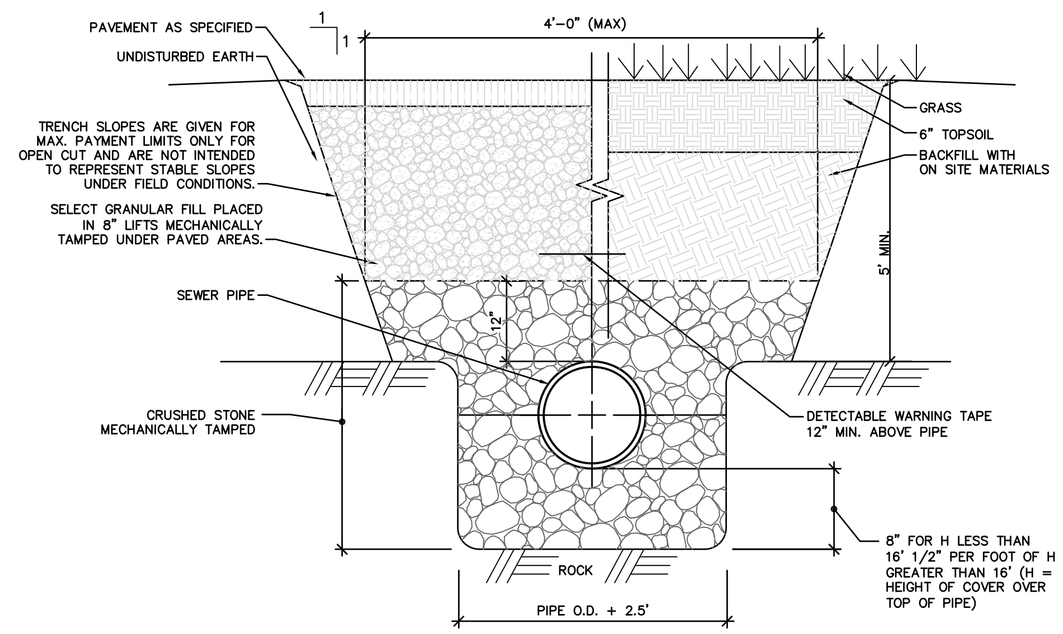

7 SEWER TRENCH (TYP.)

N.T.S.

UNAUTHORIZED ALTERATION OR ADDITION TO THIS DRAWING IS A VIOLATION OF SECTION 7209, SUBDIVISION 2 OF THE NEW YORK STATE EDUCATION LAW. COPIES OF THIS DRAWING ARE VALID ONLY IF THEY BEAR THE SEAL OF A LICENSED PROFESSIONAL ENGINEER, ARCHITECT, LANDSCAPE ARCHITECT, SURVEYOR. IT IS A VIOLATION OF NEW YORK STATE EDUCATION LAW FOR ANY PERSON TO ALTER THESE PLANS, SPECIFICATIONS OR REPORTS IN ANY WAY; UNLESS ACTING UNDER THE DIRECTION OF A LICENSED PROFESSIONAL ENGINEER, ARCHITECT, LANDSCAPE ARCHITECT, SURVEYOR, AND THE SPECIFIC ALTERATION IS DESCRIBED AND SEALED BY HIM. ANY SUCH ALTERATION BY ANOTHER ENGINEER, ARCHITECT, LANDSCAPE ARCHITECT, OR SURVEYOR MUST BEAR HIS SEAL, THE NOTATION "ALTERED BY" FOLLOWED BY HIS SIGNATURE AND THE DATE OF SUCH ALTERATION, AND A SPECIFIC DESCRIPTION OF THE ALTERATION. COPYRIGHT 2026 KAATERSKILL ASSOCIATES

Plotted: 3/30/2026 10:06 AM By: mmahn
Ref. Files: ALTA 322922 TN 166.18.tif
XREF Files: 322922 BASE
IMAGE Files: 322922 TN 166.18.tif
OPEN COUNTY.tif
MC-4536.jpg
MC-4536.jpg
MC-4536.jpg
MC-4536.jpg
MC-4536.jpg
V:\Schenectady Sewer Plans.tif
GREEN COUNTY.tif
S:\2022\322922\CAD\322922 BASE.dwg

2	9/17/26	REV. PER DEP	DCE
1	9/9/26	SITE PLAN UPDATES	DCE
REV	DATE	DESCRIPTION	APP.

REVISIONS

KAATERSKILL ASSOCIATES

SURVEYORS-ARCHITECTS-ENGINEERS-LANDSCAPE ARCHITECTS-CONSTRUCTION MANAGERS

CAIRO, NY (518) 622-9667 WWW.KEAENG.COM

PROPOSED SITE PLAN

FOR

BRANOVER - THREE SINGLE FAMILY HOMES

5860 & 5844 MAIN STREET (NYS ROUTE 23A)

VILLAGE OF TANNERSVILLE GREENE COUNTY, NY

PROJECT:	322922
DATE:	07/30/2026
SCALE:	1"=30'
DRAWN BY:	RAP
DESIGNED BY:	DCE
CHECKED BY:	DCE
FILE:	322922 X-PR SITE.DWG

DRAWING: **SP-3**

SHEET 3 OF 3